DentalTools

Eighteeth

Model: HyperLight

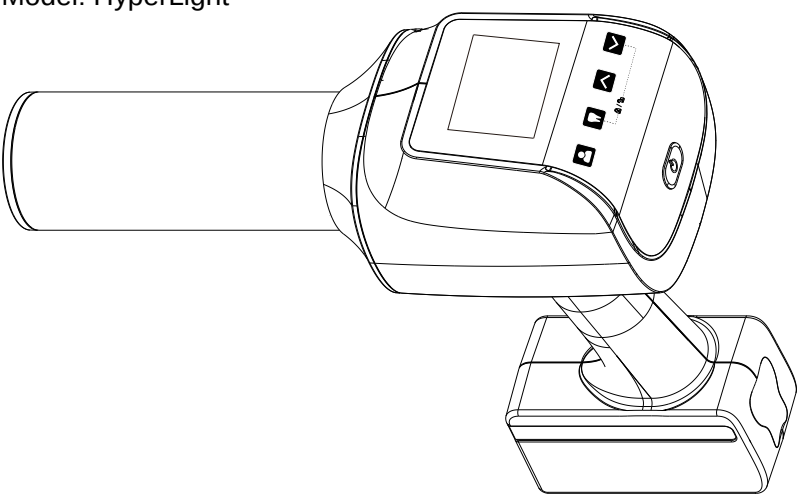

Hand-held Dental X-ray System
USER MANUAL

Changzhou Sifary Medical Technology Co.,Ltd.

www.dentaltools.com.mx

DentalTools

Version: S01
IFU-7035001
Issued: 2021.6.1
Size:197mmX140mm

DentalTools

Content

1. Overview 4

1.1 Content 4

1.2 Packing list and coding 5

2. Symbol instruction 6

3. Foreword 7

3.1 Scope of application 7

3.2 Contraindications 7

4. Safety Precautions 9

4.1Radiation Safety 9

4.2 Leakage Dose 10

5. Installation 11

5.1 Plug in the charging cable 11

5.2 Install backscatter radiation shielding 11

6 Operation 12

6.1 Operation panel instructions 12

6.12 PowerOn/Off 13

6.3 Screen instructions 14

6.4 Set interface 16

6.5 Use of exposure function 17

6.5 Positioning Instructions 18

6.5.1 Paralleling technique 18

6.5.2 Bisected angle technique 19

6.5.3 Recommended angle and default exposure time for each tooth type 20

7 Cleaning 22

8 Maintenance 23

9 Troubleshooting 24

10 Technical Data 25

10.1 Main Body Technical Data 25

10.2 X-ray Tube Specifications and Characteristics 27

11 EMC Tables 29

12 Statement 34

1. Overview

1.1 Content

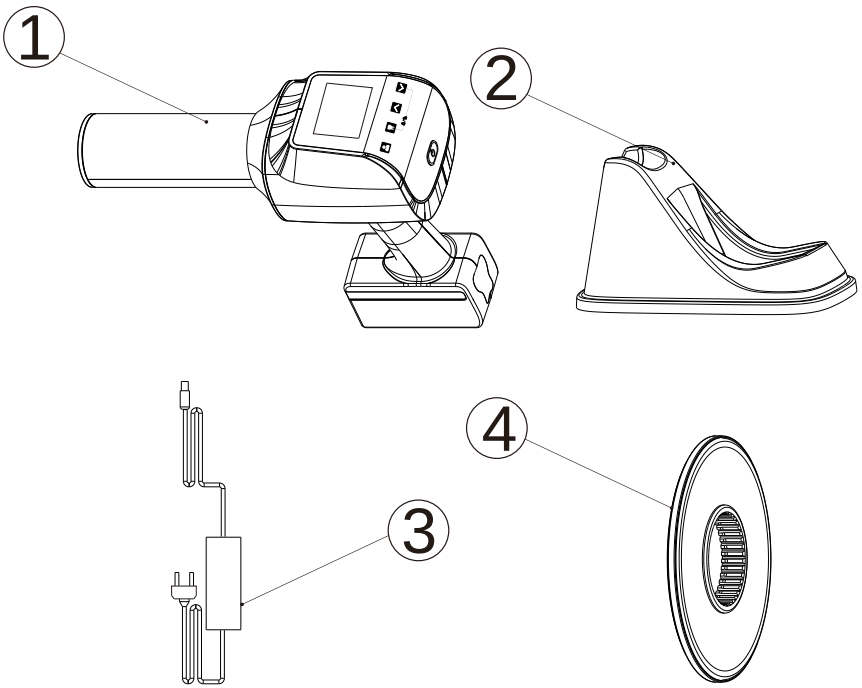

1.HyperLight Main Body
2.Base
3.Power Adapter with removable power cord
4.Backscatter Radiation Shielding

1.2 Packing list and coding

HyperLight Main Body（1 pcs） 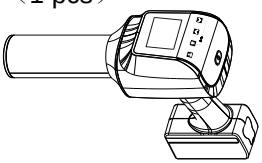	Base（1 pcs）	Power Adapter with removable power cord（1 pcs） 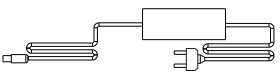
Backscatter Radiation Shielding（option）		

2. Symbol Instruction

WARNING	If the instructions are not followed properly, operation may lead to hazards for the product or the user/patient.
NOTE	Additional information, explanation of operation and performance.
SN	Serial number
	Type BF applied part
~	Alternating current
	Dispose of in accordance with the WEEE directive
	Keep dry
55℃ -20℃	Temperature limitation
80% 20%	Humidity limitation
106kPa 70kPa	Atmospheric pressure limitation
REF	Catalogue number
	Manufacturer
	Date of manufacture
LOT	Lot of manufacture
EC REP	Authorized Representative in the European Community
Eighteeth	Manufacturer's LOGO
	Follow instructions for use
	Warning of ionizing radiation
	External extension cord interface

3. Foreword

3.1 Scope of application

The HyperLight Hand-held Dental X-ray System is indicated for use only by a trained and qualified dentist or dental technician for both adult and pediatric subjects as an extraoral diagnostic dental X-ray source to produce X-ray images using intraoral image receptors.

This device must only be used in hospital environments, clinics or dental offices by trained and qualified dental personnel and not used in the oxygen-rich environment.

3.2 Contraindications

The device is designed for use with patients of any overall health status, as solely determined by the practitioner, with the following considerations for specific circumstances:

- Pregnant women. The medical practitioner must weigh the benefits conferred by use of the device against the potential hazard to the pregnant woman and fetus resulting from radiation exposure. If use of the device is considered justified, the practitioner must take the appropriate precautions, such as use of radiation safety garments, to limit radiation exposure beyond the maxillofacial complex.
- Pediatric. The medical practitioner must weigh the benefits conferred by use of the device against the potential hazard to the child resulting from radiation exposure, considering the maturity of the child's physical development. If use of the device is considered justified, the practitioner must take the appropriate precautions, such as use of radiation safety garments, to limit radiation exposure beyond the maxillofacial complex.
- Patients with medical conditions causing involuntary movements. For patients who experience seizures or who have been diagnosed with conditions such as Parkinson's Disease which can cause difficulty in controlling physical movements, the medical practitioner must weigh the benefits conferred by use of the device against the potential hazard to the patient resulting from additional radiation exposure due to a re-scan in the event that an involuntary movement renders an image unusable for diagnostic purposes.

WARNING

Read the following warnings before use:

1. The device must not be placed in humid surroundings or anywhere where it can come into contact with any type of liquids.

2. Do not expose the device to direct or indirect heat sources. The device must be operated and stored in a safe environment.

3. The device requires special precautions with regard to electromagnetic compatibility (EMC) and must be installed and operated in strict compliance with the EMC information. In particular, do not use the device in the vicinity of fluorescent lamps, radio transmitters, remote controls and do not use this system near the active HF Surgical Equipment in the hospital. Portable RF communications equipment (including peripherals such as antenna cables and external antennas) should be used no closer than 30 cm (12 inches) to any part of Hand-held Dental X-ray System, including cables specified by the manufacturer. Otherwise, degradation of the performance of this equipment could result. Do not charge, operate or store at high temperatures. Comply with the specified operating and storage conditions.

4. Gloves are compulsory during treatment.

5. If irregularities occur in the device during treatment, switch it off. Contact the agency.

6. Never open or repair the device yourself, otherwise, void the warranty.

4. Safety Precautions

4.1Radiation Safety

The HyperLight was designed to be used in clinical settings (e.g., a dental office) and controlled settings where transportation or use of other X-ray devices might be prohibitive due to the device's size and/or mobility.

This X-ray unit may be dangerous to patient and operator unless safe exposure factors, operating instructions, and maintenance schedules are observed.

The HyperLight provides a high degree of protection from unnecessary radiation. However, no practical design can provide complete protection nor prevent operators from exposing themselves or others to unnecessary radiation. It is important to restrict use and follow all applicable government radiation protection regulations. Pregnant women should not be exposed to X-rays unless necessary. Proper safety precautions should be taken to minimize dose to the fetus.

Operators must be fully acquainted with industry safety recommendations, established maximum permissible doses, and local jurisdiction requirements for use.

This X-ray unit must only be operated by trained personnel in a controlled setting. Within such a setting, ensure that only the patient is in the direct beam of the x-ray, and that any ancillary personnel are a minimum of 6 feet away from the patient. If it is necessary for any ancillary personnel to be closer than 6 feet, these personnel should stay out of the direct beam and wear personal protective equipment, such as an apron and thyroid collar.

In implementing a radiation protection program, consult all applicable regulations governing radiation protection and the use of X-ray equipment, and ensure full compliance with any such regulations.

4.2 Leakage Dose

Leakage Dose	Permissive Range
65 kVp, 2.5 mA, 0.5 s (Max. Exposure Condition) At Focal Spot to Distance 1 m 1 : 30 Duty Cycle	< 0.25 mGy/h

5. Installation

5.1 Plug in the charging cable

First open the silicone cover, then plug one end of the charger into the machine and the other end into the socket. The charging icon will be displayed on the screen at this time.

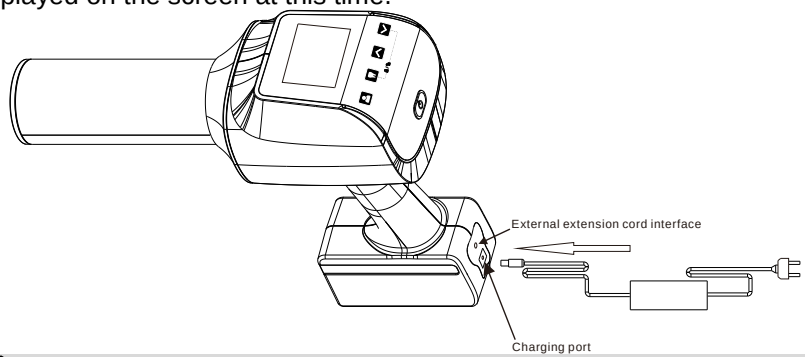

NOTE

Extension cords are not provided.

5.2 Install backscatter radiation shielding

Put the backscatter radiation shielding on the machine. This step is required only when an optional backscatter radiation shielding is required.

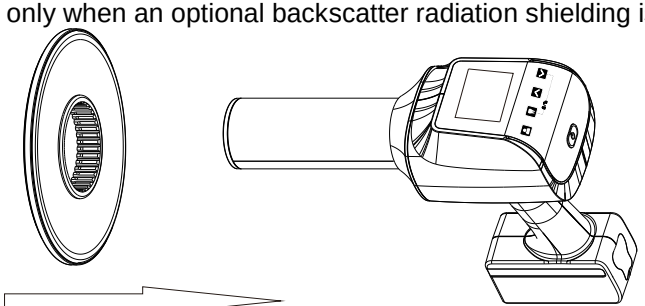

6 Operation

6.1 Operation panel instructions

Symbol	Type
	Choose adult mode or child mode
	Choose tooth type
	Increase exposure time
	Reduce exposure time
	Press two buttons at the same time to lock or unlock the machine.
	Press these two buttons at the same time to enter the setting interface.
	Power Button

6.2 Power On/Off

6.2.1 Power On

1. First press the power button and then let go, then the screen will enter the boot interface.

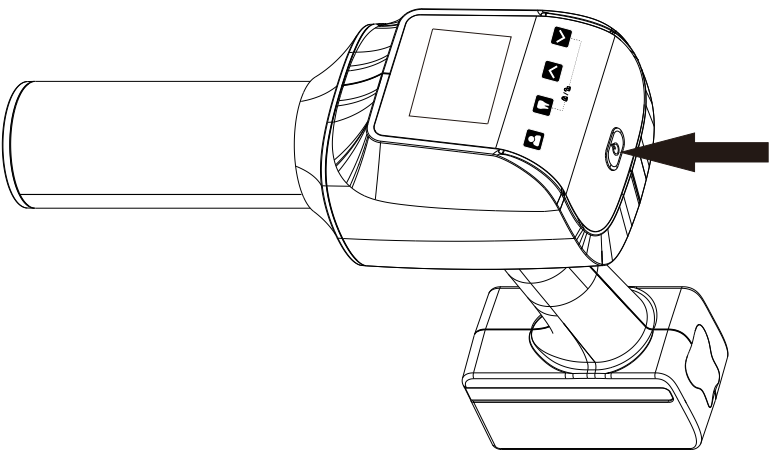

2. Make sure that the battery level is not lower than the figure below.

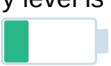

Battery level 1

6.2.2 Power Off

Long press the power button to shut down.

6.3 Screen instructions

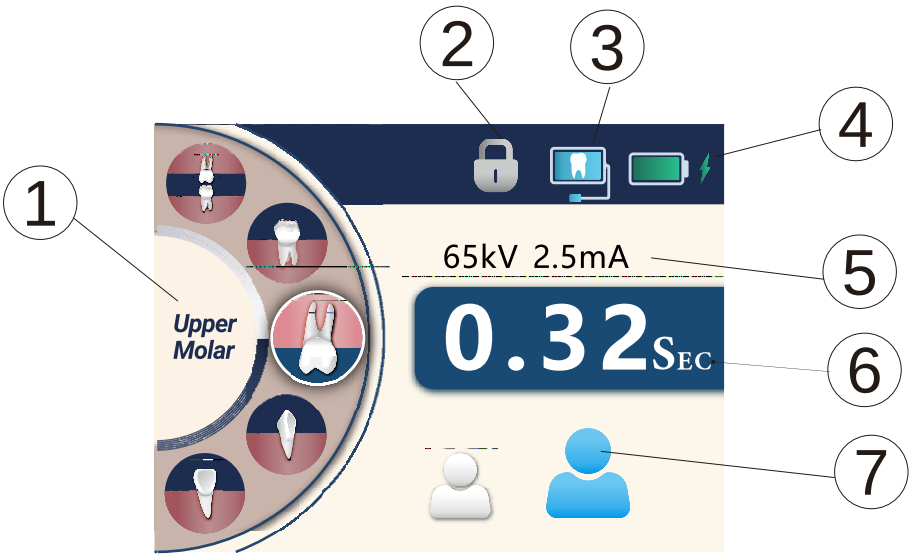

No.	Item		Description
1		Bitewing	Selects the tooth type.
		Lower Molar	
		Upper Molar	
		Canine	
		Incisor	
2		Digital Sensor	Use the sensor to receive X-rays
	P	Phosphor Plate	Use the Phosphor Plate to receive X-rays
	F	Film	Use the Film to receive X-rays

3		Machine lock	The machine is locked and cannot be exposed.
4	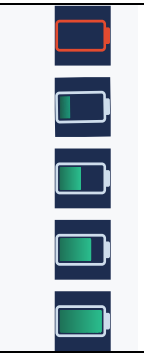	Remaining Battery Indicator	Indicates remaining battery level. When the indicator light starts to red glow, it means the battery needs to be charged.
		Battery Charging Indicator	Indicates the battery charger is connected to the device.
5	65kV 2.5mA	Tube Voltage/Current Indicator	Indicates the tube voltage and tube current of the system.
6	0.32SEC	Time Display	Displays the X-ray exposure time.
7		Adult/Child Selection	Indicates a patient type (adult or child).

6.4 Set interface

After starting up, you can press the and buttons at the same time to enter the setting interface, press the to turn the page, and press the and the to adjust the displayed parameters.

Display content	Meaning
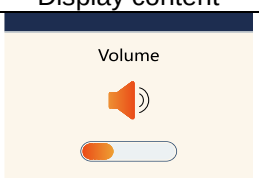	Adjust the volume of the machine.
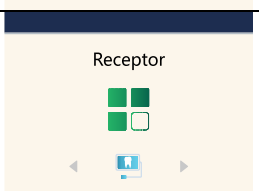	Select the type of receptor.
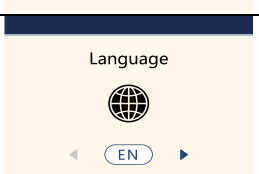	Choose a language.
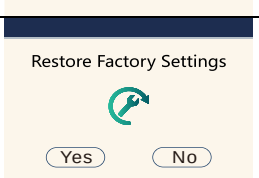	Choose whether to restore factory settings.

6.5 Use of exposure function

1. After selecting the exposure time, short press the exposure button to enter the ready state.

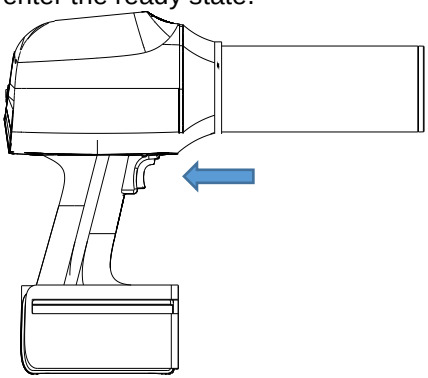

2. In the ready state, the screen will display the inclination angle of the machine to the ground plane and the 60S countdown.

3. At this time, you need to press and hold the exposure button again for exposure.

Warning

- During the exposure, keep pressing the exposure button until the exposure is over. During the exposure, if you release the exposure button, the exposure will stop immediately.

4. When the screen display is finish, it means that the exposure has been completed.

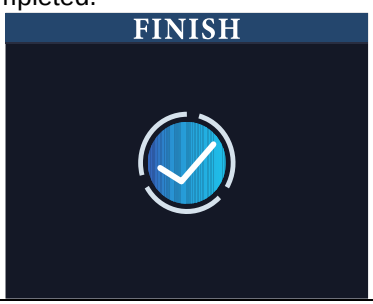

6.5 Positioning Instructions

6.5.1 Paralleling technique

The sensor is placed in a holder which is used to align the sensor parallel to the long axis of the teeth.

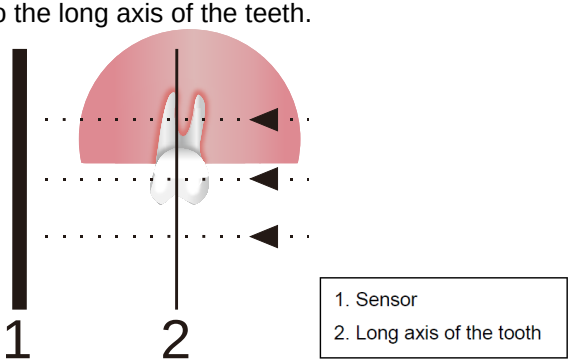

6.5.2 Bisected angle technique

The patient holds the sensor in place with his/her finger. The X-ray beam is directed perpendicularly towards an imaginary line, which bisects the angle between the sensor plane and the long axis of the tooth.

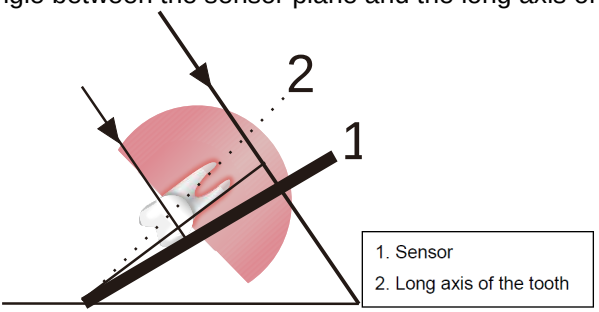

Position the tube head to the patient according to the accepted standard positioning procedures.

6.5.3 Recommended angle and default exposure time for each tooth type

Receptor		Patient	Teeth		Angle of inclination (The patient sits in a chair vertically.)	Exposure time(s)
	Digital Sensor	Adult		Bitewing	+5˚~ +8˚	0.4
				Lower Molar	-5˚	0.2
				Upper Molar	+30˚	0.32
				Canine	Maxilla: +45˚ Mandible: -20˚	0.25
				Incisor	Maxilla: +45˚ Mandible: -25 ˚	0.16
		Child		Bitewing	+5˚~ +8˚	0.32
				Lower Molar	-5˚	0.13
				Upper Molar	+30˚	0.2
				Canine	Maxilla: +45˚ Mandible: -20˚	0.1
				Incisor	Maxilla: +45˚ Mandible: -25˚	0.08
	Phosphor Plate	Adult		Bitewing	+5˚~ +8˚	0.5
				Lower Molar	-5˚	0.25
				Upper Molar	+30˚	0.4

				Canine	Maxilla: +45˚ Mandible: -20˚	0.32
				Incisor	Maxilla: +45˚ Mandible: -25˚	0.2
		Child		Bitewing	+5˚~ +8˚	0.4
				Lower Molar	-5˚	0.16
				Upper Molar	+30˚	0.25
				Canine	Maxilla: +45˚ Mandible: -20˚	0.13
				Incisor	Maxilla: +45˚ Mandible: -25˚	0.1
	Film	Adult		Bitewing	+5˚~ +8˚	0.8
				Lower Molar	-5˚	0.4
				Upper Molar	+30˚	0.63
				Canine	Maxilla: +45˚ Mandible: -20˚	0.5
				Incisor	Maxilla: +45˚ Mandible: -25˚	0.32
		Child		Bitewing	+5˚~ +8˚	0.63
				Lower Molar	-5˚	0.25
				Upper Molar	+30˚	0.4
				Canine	Maxilla: +45˚ Mandible: -20˚	0.2
				Incisor	Maxilla: +45˚ Mandible: -25˚	0.16

7 Cleaning

1. Use medical alcohol (Ethanol 70 to 80 vol%) to wipe the surface of the HyperLight ,charger,base and Backscatter Radiation Shielding. Do not use cleaning agents other than ethanol,since certain chemical combinations may deteriorate the HyperLight plastic prematurely.
2. Unplug the charging cradle before cleaning.

NOTE

The HyperLight, the base, the charging cradle, and the AC power supply are not designed to be subjected to any kind of sterilization procedure.

8 Maintenance

If you do not use the machine for a long time, you need to charge the machine every 6 months.

9 Troubleshooting

When trouble is found, check the following points before contacting your distributor. If none of these are applicable or the trouble is not remedied even after action has been taken, the product may have failed. Contact your distributor.

Malfunction	Causes	Methods
	Insufficient charge	Use the charger to charge the machine.
	The machine temperature is too high.	Let stand for more than half an hour.
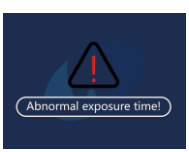	Abnormal exposure time	During the exposure process, the finger released the exposure button, causing the exposure to be forcibly terminated.
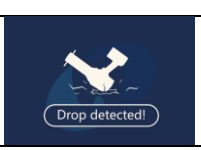	Drop detected	A fall of the machine is detected, which may cause damage to the machine.
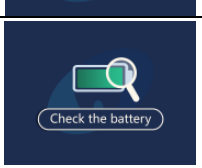	Check the battery	Frequent use of the machine for a long time causes the battery temperature to be too high.

10 Technical Data

10.1 Main Body Technical Data

Manufacturer	Changzhou Sifary Medical Technology Co., Ltd.
Model	HyperLight
Package Dimensions	489mm×367.5mm×219mm（±10%）
Total Weight	4kg±20%
Charger power supply	~100-240V 50/60Hz
Power supply	Lithium ion battery: 14.8V, 2500mAh +10%
Charger power output	24V ⎓ 1.5A
Ray type	X Ray
X-ray tube model	KL11-0.4-70
Tube voltage	65kV(±10%)
Tube Current	2.5mA（±20%）
Exposure time adjustment range	0.02-2S
Nominal power	162.5W nominal at 65kV, 2.5mA
Inherent Filtration	0.8mmAl
Total Filtration	1.8mmAl
Duty Cycle	1:30
Minimum source to skin distance	＞20cm (from focal spot to cone tip)
Nominal dose output at cone tip	3mGy/sec.
X-ray field size and configuration	57mm diameter circle
Applied part	BF
Electrical safety class	Class IIb
IPX specification	IPX0; do not operate under wet conditions
Mode of operation	Intermittent operation 2S ON/60S OFF
Ambient conditions	Use: in enclosed spaces Ambient temperature: 10°C ~ 40°C Relative humidity: <80%; non-condensing at 0°

	Operating altitude < 3000m above sea level
Transport and storage conditions	• Ambient temperature: -20 °C ~ +55 °C • Relative humidity: 20% - 80 %, non-condensing at > 40 °C • Atmospheric pressure: 70 kPa - 106 kPa

10.2 X-ray Tube Specifications and Characteristics

Filament voltage	2.4-3.0V
Maximum filament current	2.9A
Nominal tube voltage	70kV
X-ray source assembly maximum heat content	4500J
Maximum anode cooling rate	110W
Nominal anode input power	600W
Target material	Tungsten
Minimum target angle	12°
Filament voltage (at maximum filament current 2.9A)	2.4~ 3.0V
Minimum permanent filtration (IEC 60522:1999)	0.8mm/75kV
Nominal focal spot (IEC 60336:1993)	0.4mm

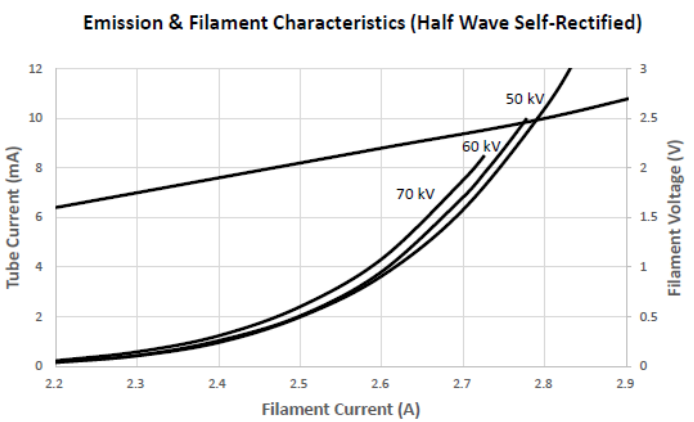

:

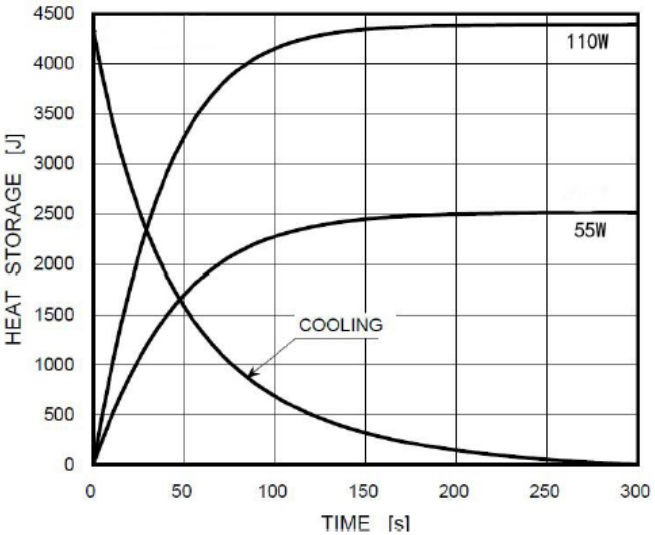
4500
4000
3500
3000
2500
2000
1500
1000
500
0
HEAT STORAGE [J]
110W
55W
COOLING
0
50
100
150
200
250
300
TIME [s]

:

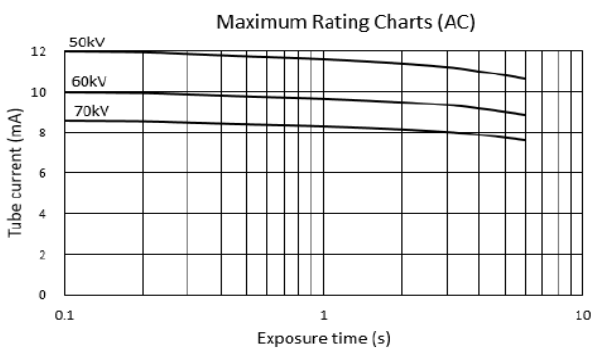
Maximum Rating Charts (AC)
50kV
60kV
70kV
12
10
8
6
4
2
0
Tube current (mA)
0.1
1
10
Exposure time (s)

11 EMC Tables

Guidance and manufacturer's declaration – electromagnetic emissions		
The HyperLight is intended for use in the electromagnetic environment specified below. The customer or the user of the HyperLight should assure that it is used in such an environment.		
Emissions test	**Compliance**	**Electromagnetic environment - guidance**
RF emissions CISPR 11	Group 1	The HyperLight uses RF energy only for its internal function. Therefore, its RF emissions are very low and are not likely to cause any interference in nearby electronic equipment.
RF emissions CISPR 11	Class B	The HyperLight is suitable for use in all establishments, including domestic establishments and those directly connected to the public low-voltage power supply network that supplies buildings used for domestic purposes.
Harmonic emissions IEC61000-3-2	Class A	
Voltage fluctuations/flicker emissions IEC 61000-3-3	Complies	

Guidance and manufacturer's declaration – electromagnetic immunity			
The HyperLight is intended for use in the electromagnetic environment specified below. The customer or the user of the HyperLight should assure that it is used in such an environment.			
Immunity test	**IEC 60601 test level**	**Compliance level**	**Electromagnetic environment - guidance**
Electrostatic Discharge (ESD) IEC 61000-4-2	+/-8 kV contact +/-15kV air	+/-2, 4, 6 & 8kV contact +/-2, 4, 8, & 15 kV air	Floors should be wood, concrete or ceramic tile. If floors are synthetic, the r/h should be at least 30%
Electrical fast Transient/burst IEC 61000-4-4	+/-2 kV for power supply lines +/-1 kV for input/ output lines	+/-0.5, 1 & 2 kV for power supply lines +/-0.5 & 1 kV for input/output lines	Mains power quality should be that of a typical commercial or hospital environment.

Surge IEC 61000-4-5	+/-1 kV differential mode +/-2 kV common mode	+/-0.5 & 1 kV differential mode +/-0.5, 1 & 2 kV	Mains power quality should be that of a typical commercial or hospital environment.
Voltage dips, short interruptions and voltage variations on power supply input lines IEC 61000-4-11	100 % Dip; for 0,5 cycles At 0°, 45°, 90°, 135°, 180°, 225°, 270° and 315° 60% Dip for 1 Cycle 30% Dip for 25 Cycles 100% Dip for 5 Seconds	100 % Dip for 0,5 cycles At 0°, 45°, 90°, 135°, 180°, 225°, 270° and 315° 60% Dip for 1 Cycle 30% Dip for 25 Cycles 100% Dip for 5 Seconds	Mains power quality should be that of a typical commercial or hospital environment. If the user of the HyperLight requires continued operation during power mains interruptions, it is recommended that the HyperLight be powered from an uninterruptible power supply or battery.
Power frequency (50/60 Hz) magnetic field IEC 61000-4-8	30A/m	3 & 30A/m	Power frequency magnetic fields should be that of a typical commercial or hospital environment.

Guidance and Manufacturer's Declaration – Electromagnetic Emissions			
The HyperLight is intended for use in the electromagnetic environment specified below. The customer or user of the HyperLight should ensure that it is used in such an environment.			
Immunity test	**IEC 60601 test level**	**Compliance level**	**Electromagnetic environment - guidance**

Conducted RF IEC 61000-4-6	3 Vrms 150 kHz to 80 MHz 6Vrms in ISM bands between 0,15 MHz and 80 MHz	(V1)=3Vrms (E1)= 6Vrms in ISM bands	Portable and mobile communications equipment should be separated from the HyperLight by no less than the distances calculated/listed below: D=(3.5/V1)(Sqrt P) 150kHz to 80MHz
Radiated RF IEC 61000-4-3	3 V/m 80 MHz to 2,7 GHz	(E1)=3V/m	D=(3.5/E1)(Sqrt P) 80 to 800 MHz D=(7/E1)(Sqrt P) 800 MHz to 2.5 GHz where P is the max power in watts and D is the recommended separation distance in meters. Field strengths from fixed transmitters, as determined by an electromagnetic site survey, should be less than the compliance levels (V1 and E1). Interference may occur in the vicinity of equipment containing a transmitter. Where P is the maximum output power rating of the transmitter in watts (W) according to the transmitter manufacturer and D is the recommended separation distance in meters (m).

Guidance and Manufacturer's Declaration – Electromagnetic Emissions			
The HyperLight is intended for use in the electromagnetic environment specified below. The customer or user of the HyperLight should ensure that it is used in such an environment.			
Immunity Test	IEC 60601 Test Level	Compliance Level	Electromagnetic Environment – Guidance

			Field strengths from fixed RF transmitters, as determined by an electromagnetic site survey, should be less than the compliance level in each frequency range. Interference may occur in the vicinity of equipment marked with the following symbol:

NOTE 1 At 80 MHz and 800 MHz, the higher frequency range applies.
NOTE 2 These guidelines may not apply in all situations. Electromagnetic propagation is affected by absorption and reflection from structures, objects and people.

1. Field strengths from fixed transmitters, such as base stations for radio (cellular/cordless) telephones and land mobile radios, amateur radio, AM and FM radio broadcast and TV broadcast cannot be predicted theoretically with accuracy. To assess the electromagnetic environment due to fixed RF transmitters, an electromagnetic site survey should be considered. If the measured field strength in the location in which the Model 005 is used exceeds the applicable RF compliance level above, the Model 005 should be observed to verify normal operation. If abnormal performance is observed, additional measures may be necessary, such as re-orienting or relocating the Model 005.
2. Over the frequency range 150 kHz to 80 MHz, field strengths should be less than 1 V/m.
3. The ISM (industrial, scientific and medical) bands between 0.15 MHz and 80 MHz are 6.765 MHz to 6.795 MHz; 13.553 MHz to 13.567 MHz; 26.957 MHz to 27.283 MHz; and 40.66 MHz to 40.70 MHz. The amateur radio bands between 0.15 MHz and 80 MHz are 1.8 MHz to 2.0 MHz, 3.5 MHz to 4.0 MHz, 5.3 MHz to 5.4 MHz, 7 MHz to 7.3 MHz, 10.1 MHz to 10.15 MHz, 14 MHz to 14.2 MHz, 18.07 MHz to 18.17 MHz, 21.0 MHz to 21.4 MHz, 24.89 MHz to 24.99 MHz, 28.0 MHz to 29.7 MHz and 50.0 MHz to 54.0 MHz.

Recommended Separation Distances Between Portable and Mobile RF Communications Equipment and the HyperLight device			
The HyperLight is intended for use in the electromagnetic environment in which radiated disturbances are controlled. The customer or user of the HyperLight can help prevent electromagnetic interference by maintaining a minimum distance between portable and mobile RF Communications Equipment and the HyperLight recommended below, according to the maximum output power of the communications equipment.			
Immunity Test	IEC 60601 Test Level	Compliance Level	Electromagnetic Environment – Guidance
	Separation Distance According to Frequency of Transmitter		

Rated Maximum Output Power (Watts)	m		
	Separation (m) 150kHz to 80MHz D=(3.5/V1)(Sqrt P)	Separation (m) 80 to 800MHz D=(3.5/E1)(Sqrt P)	Separation (m) 800MHz to 2.5GHz D=(7/E1)(Sqrt P)
0.01	0.117	0.117	0.233
0.1	0.369	0.369	0.738
1	1.167	1.167	2.333
10	3.689	3.689	7.379
100	11.667	11.667	23.333

For transmitters rated at a maximum output power not listed above, the recommended separation distance d in metres (m) can be determined using the equation applicable to the frequency of the transmitter, where P is the maximum output power rating of the transmitter in watts (W) according to the transmitter manufacturer.

NOTE 1 At 80 MHz and 800 MHz, the separation distance for the higher frequency range applies.

NOTE 2 The ISM (industrial, scientific and medical) bands between 150 kHz and 80 MHz are 6.765 MHz to 6.795 MHz; 13.553 MHz to 13.567 MHz; 26.957 MHz to 27.283 MHz; and 40.66 MHz to 40.70 MHz.

WARNING

1. Use of accessories and cables other than those specified or provided by the manufacturer of HyperLight could result in increased electromagnetic emissions or decreased electromagnetic immunity of HyperLight and result in improper operation.

Cable information:

Cable Name	Cable Length (m)	Shielded or not	Remark
Power Adapter	1.2	NO	/
Power Adapter removable power cord	1.4	NO	/

2. Use of HyperLight adjacent to or stacked with other equipment should be avoided because it could result in improper operation. If such use is necessary, HyperLight and the other equipment should be observed to verify that they are operating normally

12 Statement

Service Life The service life of HyperLight series products is 5 years.
Maintenance MANUFACTURE will provide circuit diagrams, component part lists, descriptions, calibration instructions to assist to SERVICE PERSONNEL in parts repair.
Disposal The package should be recycled. Metal parts of the device are disposed as scrap metal. Synthetic materials, electrical components, and printed circuit boards are disposed as electrical scrap. Please deal with them according to the local environmental protection laws and regulation.
Rights All rights of modifying the product are reserved to the manufacturer without further notice. The pictures are only for reference. The final interpretation rights belong to CHANGZHOU SIFARY MEDICAL TECHNOLOGY CO., LTD. The industrial design, inner structure, etc, have claimed for several patents by SIFARY, any copy or fake product must take legal responsibilities.